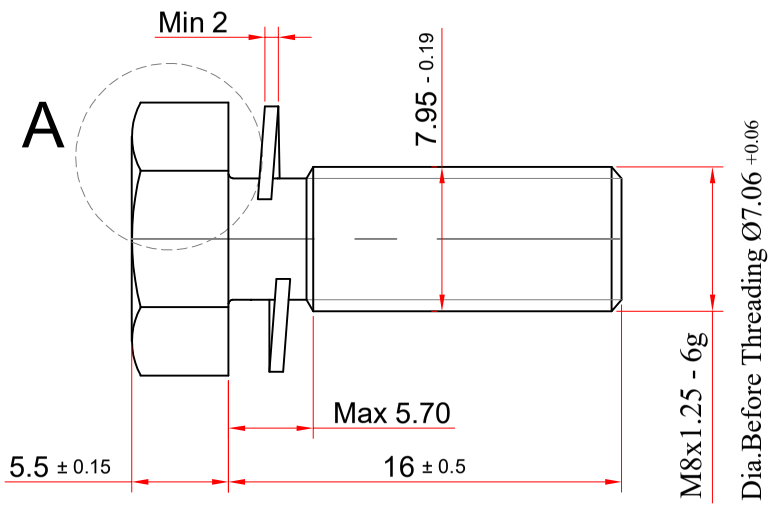

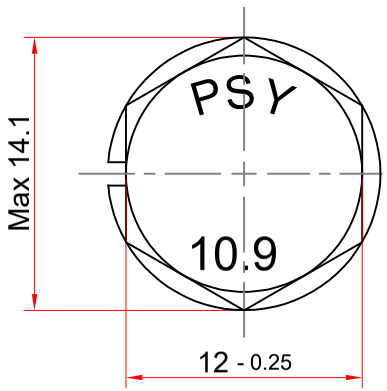

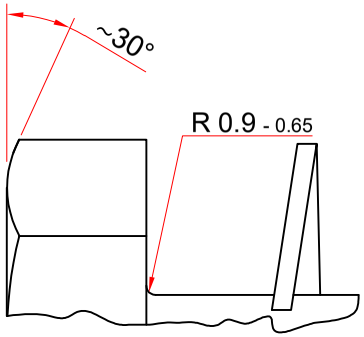

DETAIL A

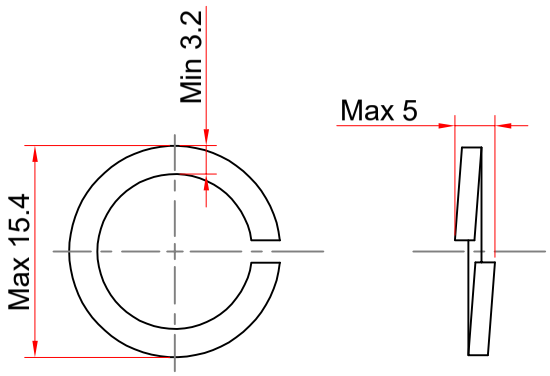

Material : CK67 /CK75

Hardness : 391-490 HV

Depth of complete decarburization :Max 0.015mm

Depth of decarburization :Max 0.3mm

Coating thickness :Min 5 µm

RE.VE:1	DATE	1403/04/21	NAME	M.Abadiyan	Description	تغییر در میزان دکربورگی و ضخامت پوشش و سختی واشر مطابق تست پلن مشتری
RE.VE:2	DATE	1404/02/14	NAME	M.Abadiyan	Description	اصلاح شیت نقشه و پارامتر استاندارد و افزودن شماره امکان سنجی
Feasibility Number :		1401-1017	Assembly Location		پیچ دیسک و کلاچ فلایویل	
Reference Standard Are As Below :			Part NO		01121-00772	
Dimension		---	Part name		M8x1.25x16-10.9	
Mechanical		NES D 2110	DWG.NO		DN01121-00772/02	
Coating		---		Name	Data	Scale	1.5:1
			Drawn	M.Zolfagari	1401/03/24	Safety	☐
Tolerances		---	Checked	S.Zabihi	1401/03/24	Regularity	☐
Other Standard		---	Confirmed	K.Farahmand	1401/03/24	Unit : mm	SEPAND PITCH CO.

Material	10B38/SCM435	Quality Class	10.9
Dia of Wire	8 - 9 mm	Core Hardness(HRC)	28-34
Weight (gr) ≈	11	Surface Hardness	---
Wire Production process	SAIP1	Tensile Strength (Mpa)	Min 883
Coating	Zinc Electroplating	Yield Strength (Mpa)	Min 706
Coating Type	MFZn 5C	Proof Load(Mpa)	---
Chromate Color	Golden	EL (%)	---
Resistance to Slat Spray		White Rust	Min 72 hr
		Red Rust	Min 144 hr
Customer Name		Mega Motor	