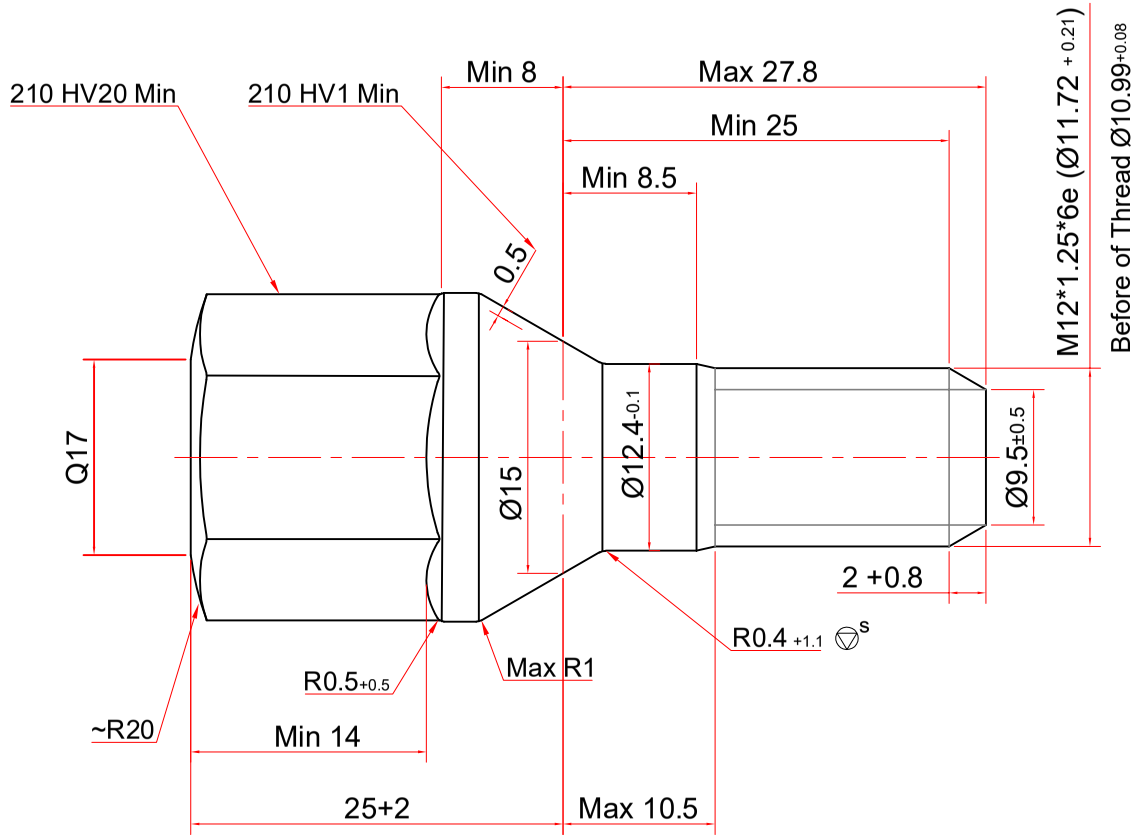

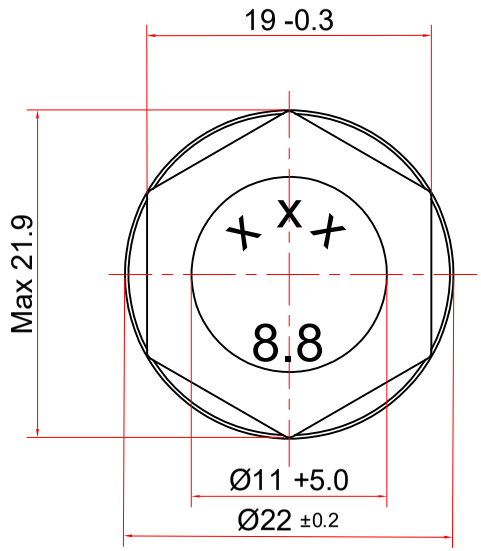

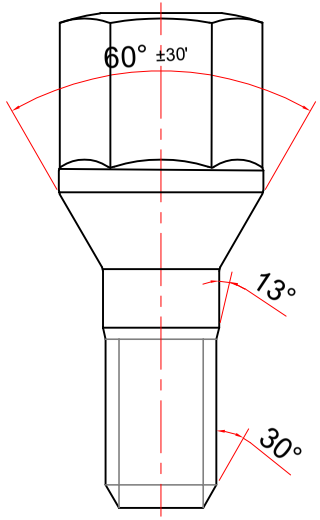

Scale: 1.2:1

FN : 012 - 0.18

Coating thickness : Min 6µm

Depth of complete decarburization : Max 0.015mm

Depth of decarburization : Max 0.25 mm

Break Force : 73760 N- 92200 N

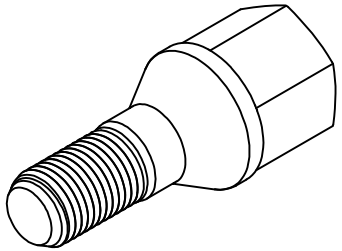

Scale: 1:1

X : مطابق کـارت همـراه محصـول

RE.VE:	DATA	1401/12/23	NAME	B.Salehizade	Description	اضـافه کـردن وزن محصـول

Standard List		Part NO	9649245680			
Dimension	---	Part name	M12x1.25x25			
Mechanical	C100020	DWG.NO	DN9649245680/00			
Coating	C153312	---	Name	Data	Scale	2:1
Tolerances	---	Drawn	S.Zabihi	00/09/13	Safety	☐
		Cheked	M.Irandost	00/09/13	Regularity	☐
Other Standard	C100055	Confirmed	K.Farahmand	00/09/13	Unit : mm	

سپند پیچ یزد

SEPAND PITCH CO.

Machine	CBP165	Core Hardness	250-320 HV
Material	10B38	Surface Hardness	---
Dia.of Material	20 mm	T.S (Mpa)	800-1000
diameter blank	18.1mm	Y.S (Mpa)	640-900
length blank	40.73mm	Proof Load	---
Weight	84.60 gr	EL (%)	Min 12%
Rod Production process	PASaip	Type Coating	DAC 500
		Color	Silver
Quality Class	8.8	Salt Spray To Sediment Red	Min 500h
Coating	Dacromat	Salt Spray To Sediment Withe	---
Customer Name :		**SAPCO**	

صنایع مفتولی سپند پیچ
سپند پیچ یزد
فنی مهندسی