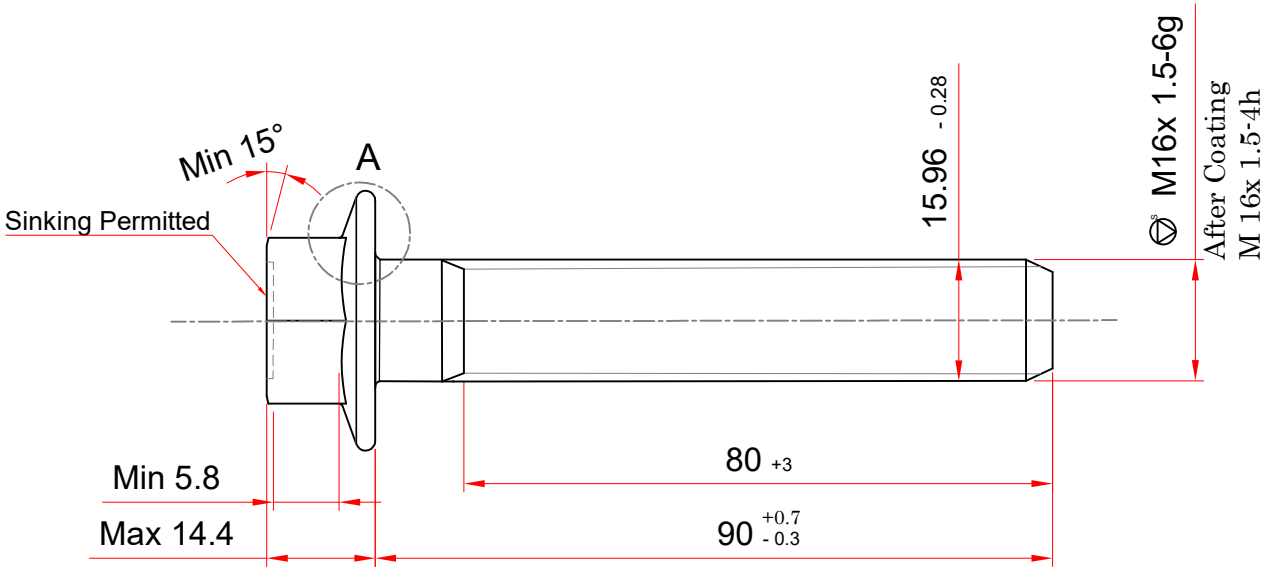

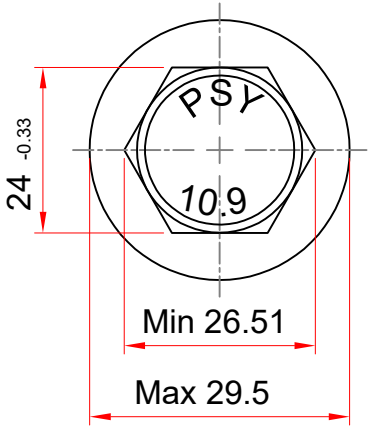

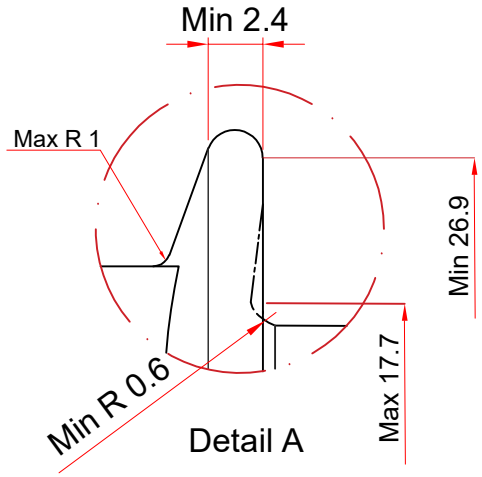

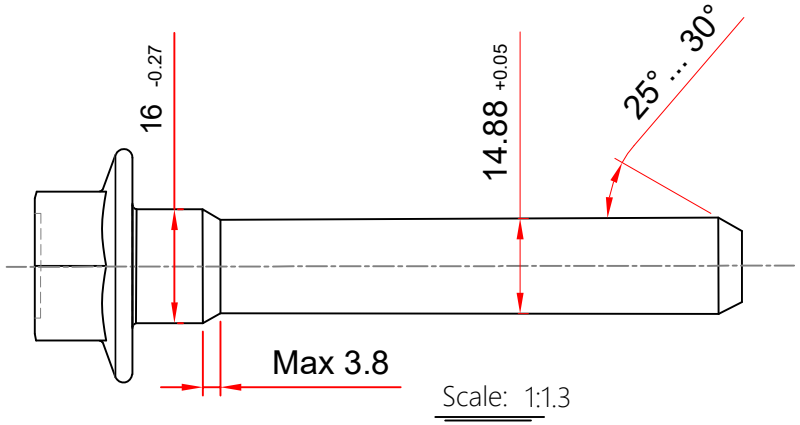

1: Depth of complete decarburization : Max 0.015mm

2: Depth of decarburization : Max 0.3mm

3: Coating mass : Min 24gr/m^2

4: Coating thickness : Min 6µm

RE.VE:	DATA	1401/09/22	NAME	S.Zabihi	Description	تغییر طول کلی مطابق درخواست مشتری
RE.VE:	DATA	1402/05/19	NAME	S.Zabihi	Description	افزودن پارمترهای ایمنی

Standard List		Part NO	IZ0039905004/07			
Dimension	MBN 10 105 (1996)	Part name	M16x1.5x90-6g			
Mechanical	DIN 898-1	DWG.NO	DNIZ0039905004/07/02			
Coating	DBL 9440	---	Name	Data	Scale	1:1.2
Tolerances	ISO 4759	Drawn	S.Zabihi	00/10/08	Safety	■
		Cheked	M.Irandost	00/10/08	Regularity	□
Other Standard	---	Confirmed	K.Farahmand	00/10/08	Unit : mm	

سپند پیچ یزد

SEPAND PITCH CO.

Machine	165S	Core Hardness(HRC)	32-39
Material	10B 38 SCM435	Surface Hardness(HV)	Max 390
Dia.of Material	17	T.S (Mpa)	Min 1040
diameter blank	15.60	Y.S (Mpa)	Min 940
length blank	123.5	Proof Load(N)	139000
Weight	---	EL (%)	Min 9%
Rod Production process	SAIP2	Type Coating	---
		Color	Silver
Quality Class	10.9	Salt Spray To Sediment Red	Min 500h
Coating	Dacromet	Salt Spray To Sediment Withe	---
Customer Name :		**Iran Khodro Diesel**	