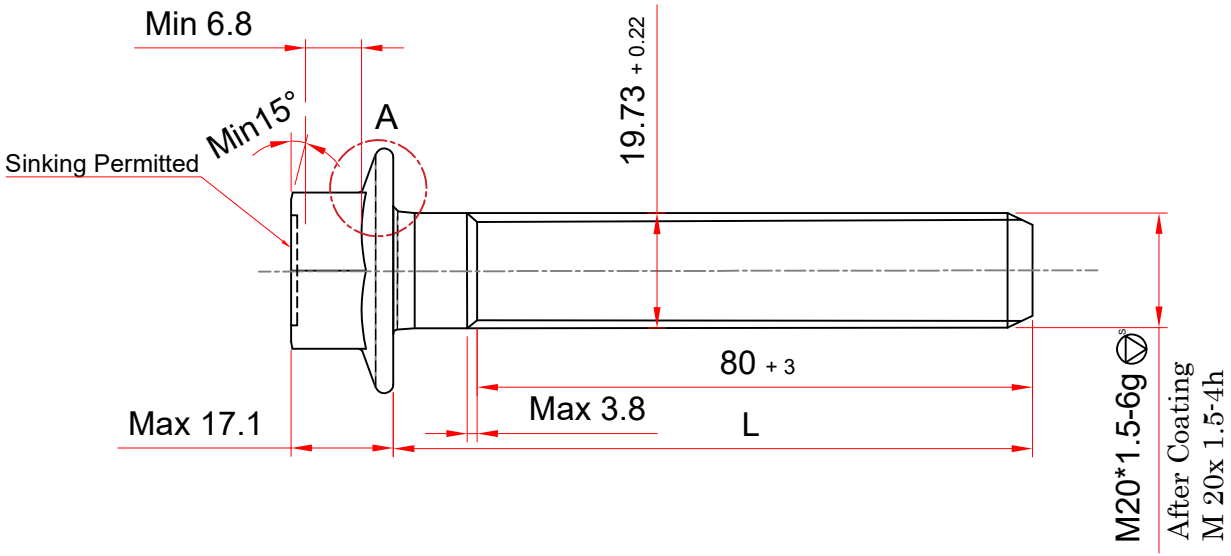

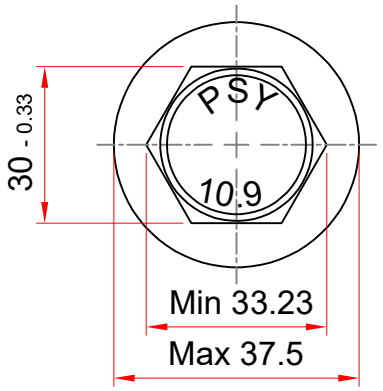

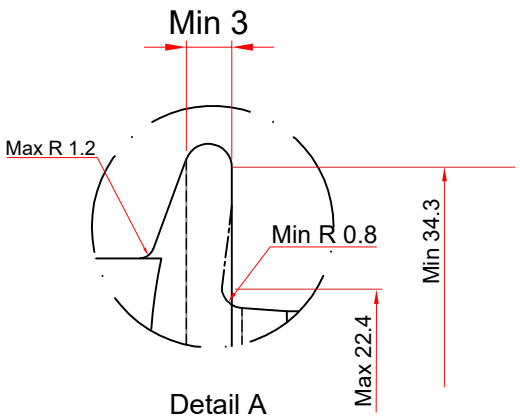

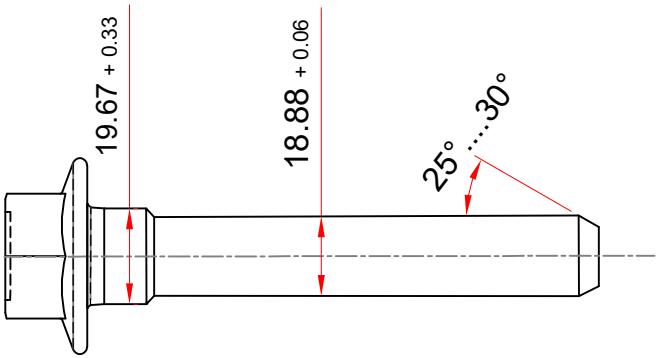

1: Depth of complete decarburization : Max 0.015mm

2: Depth of decarburization : Max 0.3mm

3: Coating mass : Min 24gr/m^2

4: Coating thickness : Min 6µm

Table 1

L	شماره فنی	شماره نقشه
$130^{+0.8}_{-0.3}$	IZ0049903304/07	IZ0049903304/07/02
$245^{+0.8}_{-0.3}$	IZ0049904304/07	IZ0049904304/07/02

RE.VE:	DATA	1401/09/22	NAME	S.Zabihi	Description	تغییر طول کلی مطابق درخواست مشتری
RE.VE:	DATA	1402/05/19	NAME	S.Zabihi	Description	افزودن پارامترهای ایمنی

Standard List		Part NO	---			
Dimension	MBN 10105	Part name	M20 x 1.5 -6g			
Mechanical	ISO 898-1	DWG.NO	---			
Coating	DBL9440	---	Name	Data	Scale	1:1
Tolerances	ISO 4759	Drawn	S.Zabihi	00/10/08	Safety	■
		Cheked	M.Irandost	00/10/08	Regularity	□
Other Standard	---	Confirmed	K.Farahmand	00/10/08	Unit : mm	

سپند پیچ یزد

SEPAND PITCH CO.

Machine	---	Core Hardness(HRC)	32-38
Material	10B 38 SCM435	Surface Hardness(HV)	Max 390
Dia.of Material	---	T.S (Mpa)	Min 1040
diameter blank	---	Y.S (Mpa)	Min 960
length blank	---	Proof Load(N)	---
Weight	---	EL (%)	Min 9%
Rod Production process	PASAIP	Type Coating	----
		Color	Silver
Quality Class	10.9	Salt Spray To Sediment Red	Min 500h
Coating	Dacromet	Salt Spray To Sediment Withe	---
Customer Name :		**Iran Khodro Diesel**	