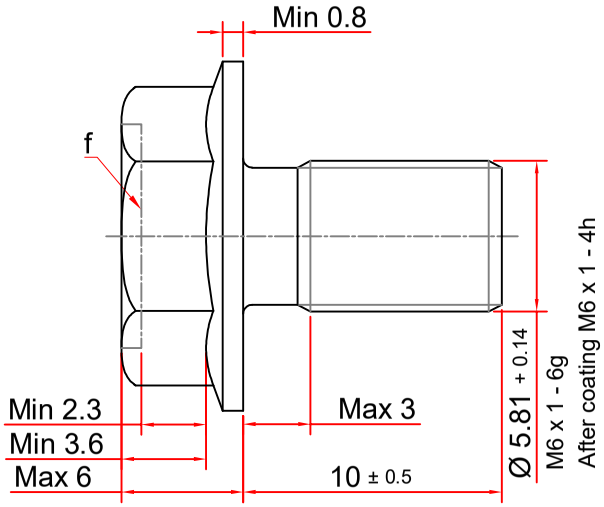

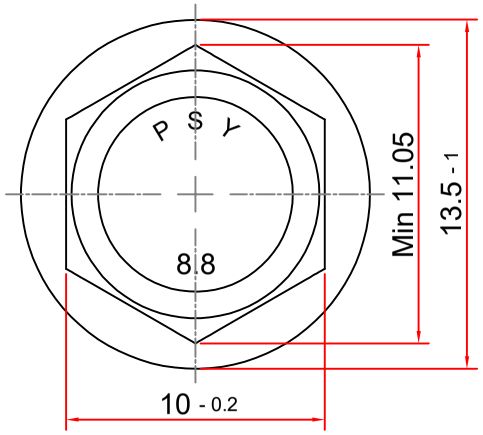

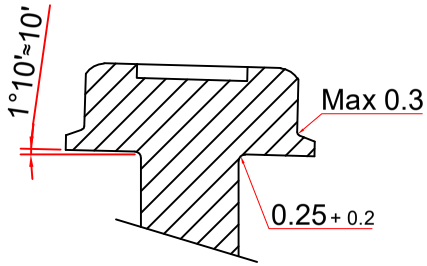

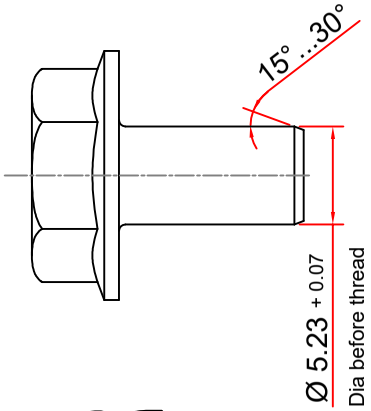

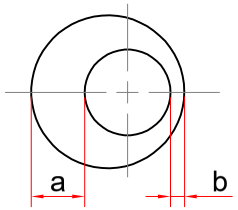

(a - b = Max 0.3)

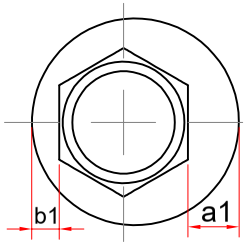

(a1 - b1 = Max 0.3)

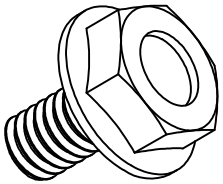

Scale 1:1

1- Coating thickness : Min 5µm

2- (f) Shall be 1/3H or less and that shape is optional

3- Without any cracks, burrs, rust, damage to the threads and completeness

4- There shall be no rough surface,flush,burrs,rust on the surface of the bolt

5- Depth of complete decarburization : Max 0.015mm

6- Depth of decarburization : Max 0.30mm

RE.VE:	DATA	---	NAME	---	Description	---

Standard List		Part NO	K99784-0610			
Dimension	---	Part name	M6 x 1 x 10 - 6g			
Mechanical	KES C-C001	DWG.NO	DNK99784-0610/00			
Coating	KES C-F002	---	Name	Data	Scale	3:1
Tolerances	---	Drawn	M.Zolfaghari	02/05/07	Safety	☐
		Cheked	S.Zabihi	02/05/07	Regularity	☐
Other Standard	JIS B 0211	Confirmed	K.Farahmand	02/05/07	Unit : mm	

سپند پیچ یزد

SEPAND PITCH CO.

Machine	64S	Core Hardness(HRC)	21 - 32
Material	10B21-10B38	Surface Hardness(HV)	Max 320
Dia.of Material	6.5	T.S (Mpa)	785 - 981
diameter blank	5.60	Y.S (Mpa)	Min 628
length blank	23.68	Proof Load (Mpa)	---
Weight	5.22	EL (%)	Min 12%
Rod Production process	SAIP2	Type Coating	MFZn T1C
		Color	Golden
Quality Class	8.8	Salt Spray To Sediment Red	Min 120h
Coating	Chromate	Salt Spray To Sediment Withe	Min 72h
Customer Name :		**Mega Motor**	