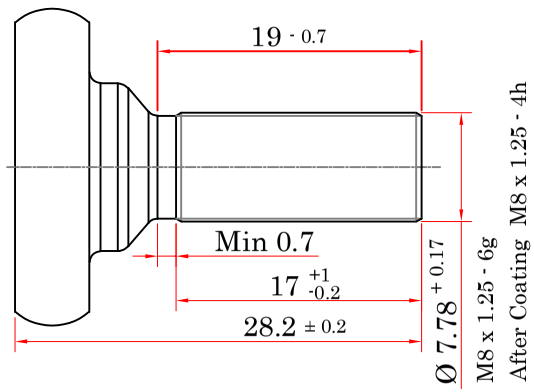

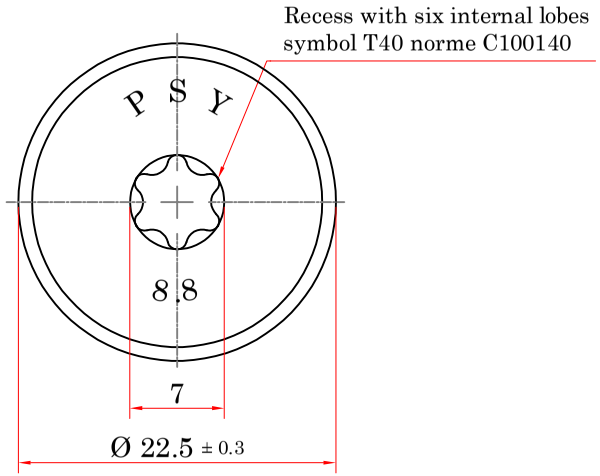

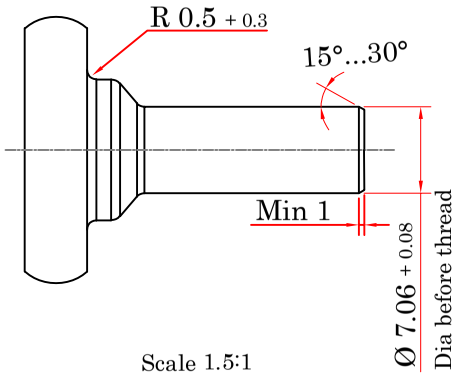

Scale 1.5:1

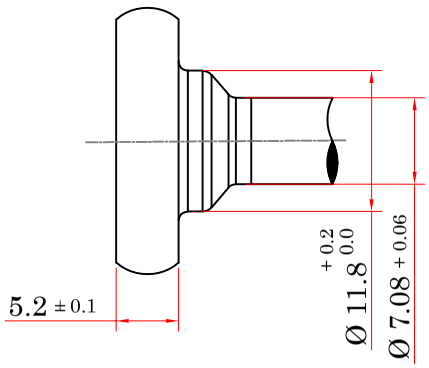

Scale 1.5:1

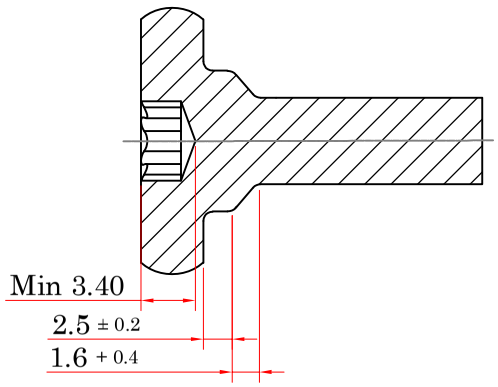

Scale 1.5:1

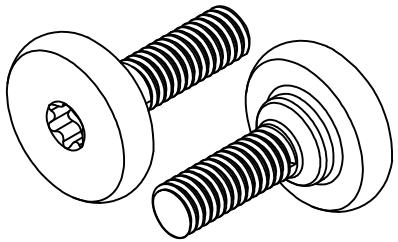

Scale 1:1

Title : XU7 Tensioner screw

RE.VE:2	DATA	1403/05/13	NAME	M.Abadiyan	Description	عمق فرو رفتگی
RE.VE:3	DATA	1403/07/02	NAME	M.Abadiyan	Description	تغییر قطر نهایی مفتول
RE.VE:4	DATA	1403/09/06	NAME	M.Abadiyan	Description	اصلاح اندازه زیرکله تا رزوه واندازه پونت

Standard List		Part NO	YG20204522			
Dimension	---	Part name	M 8x 1.25 x 23 - 6g			
Mechanical	C100020	DWG.NO	DNYG20204522/04			
Coating	---	---	Name	Data	Scale	1.7:1
Tolerances	---	Drawn	M.Zolfaghari	02/06/14	Safety	
		Cheked	S.Zabihi	02/06/14	Regularity	
Other Standard	---	Confirmed	K.Farahmand	02/06/14	Unit : mm	

سپند پیچ یزد

SEPAND PITCH CO.

Machine	105S	Core Hardness (HV)	250-320
Material	10B21/10B38	Surface Hardness (HRC)	---
Dia.of Material	11-12	T.S (Mpa)	800-1000
diameter blank	10.60	Y.S (Mpa)	640-900
length blank	---	Proof Load	---
Weight	---	EL (%)	Min 12%
Rod Production process	PASAIP	Type Coating	---
		Color	Silver gray
Quality Class	8.8	Salt Spray To Sediment Red	Min 500 hr
Coating	Dacromate	Salt Spray To Sediment White	---
Customer Name :	Pooya sanat mehvar khavaran		