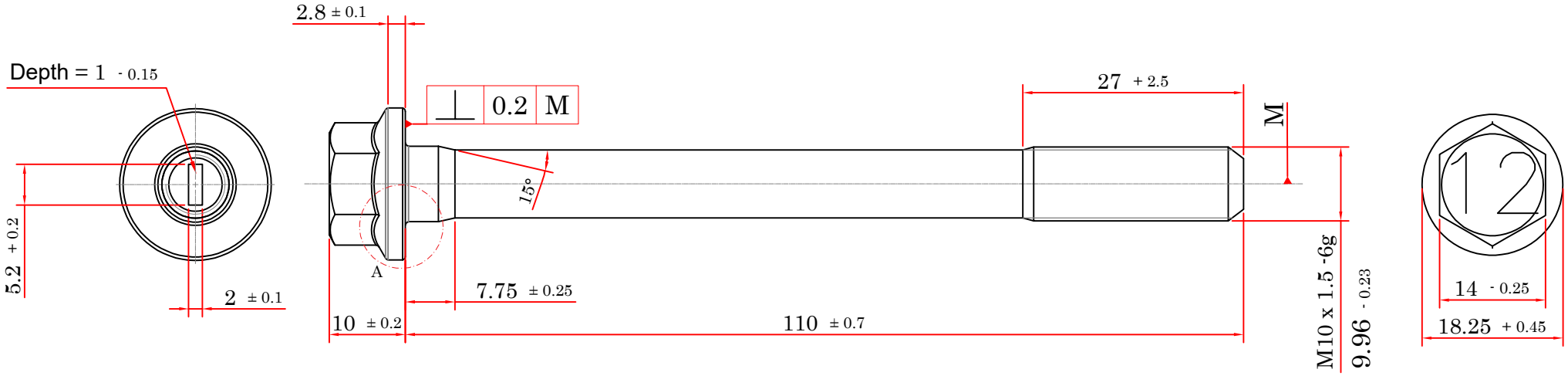

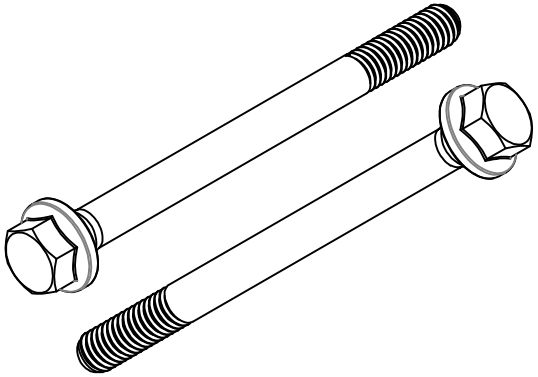

scale: 1 : 2

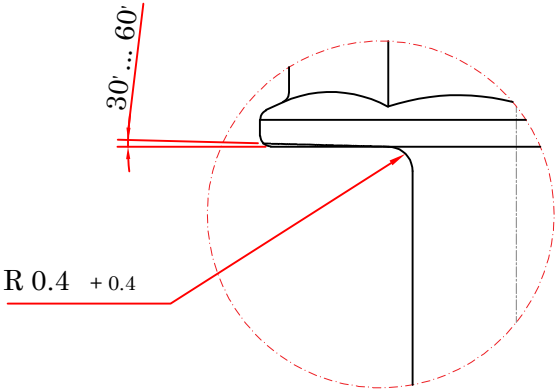

Detail A

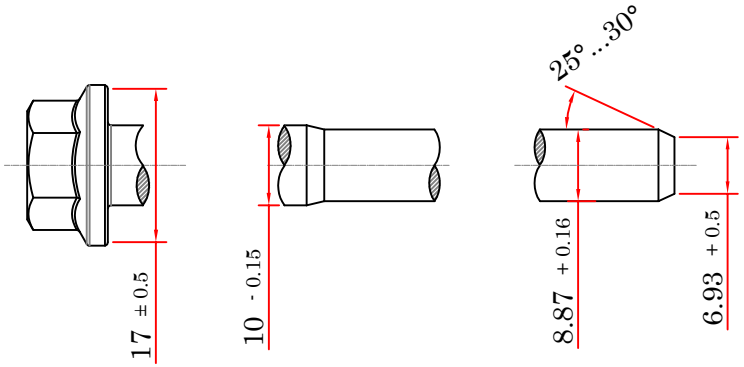

scale: 1 : 1

RE.VE:	DATA	1401/08/15	NAME	S.Zabihi	Description	تغییـــر طول ســـادگی و رزوه
RE.VE:	DATA	1402/07/16	NAME	S.Zabihi	Description	تغییـــر قطـر فلنـــج

Standard List		Part NO	11057-H5710			
Dimension	---	Part name	M10*1.5*110-12.9-6g			
Mechanical	---	DWG.NO	DN11057-H5710/02			
Coating	---	---	Name	Data	Scale	1.2:1
Tolerances	---	Drawn	S.Zabihi	00/11/11	Safety	□
		Cheked	M.Irandost	00/11/11	Regularity	□
Other Standard	---	Confirmed	K.Farahmand	00/11/11	Unit : mm	

سپنـد پیـچ یـزد

SEPAND PITCH CO.

Machine	105L	Core Hardness(HRC)	40-44
Material	SCM435	Surface Hardness(HV)	Max 435
Dia.of Material	12	T.S (Mpa)	Min 1220
diameter blank	9.60	Y.S (Mpa)	Min 1100
length blank	---	Proof Load	---
Weight	70 gr	EL (%)	Min 8%
Production process Wire rod	PASAIP	Type Coating	---
		Color	---
Quality Class	12.9	Salt Spray To Sediment Red	---
Coating	Black Oxide	Salt Spray To Sediment Withe	---
Customer Name :		---	