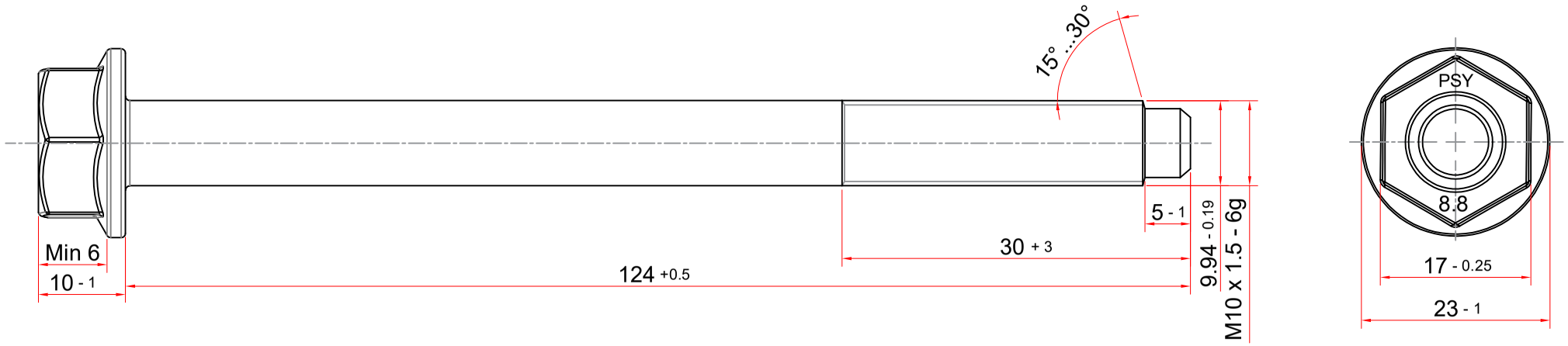

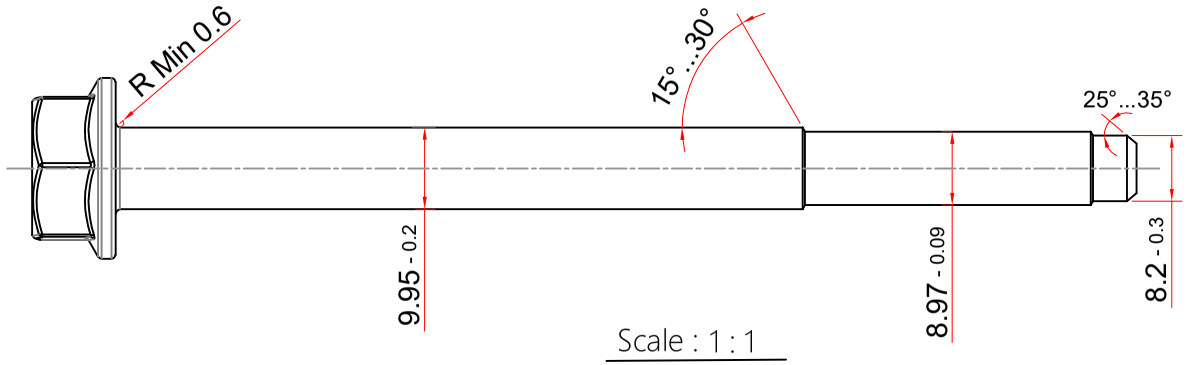

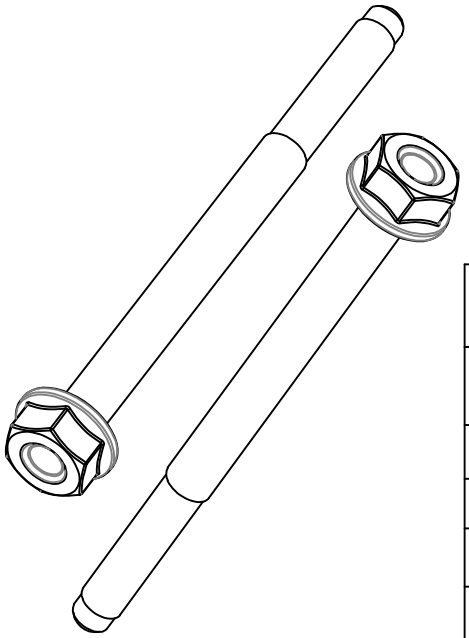

RE.VE:	DATA	---	NAME	---	Description	---

Standard List		Part NO	289-92614A/01			
Dimension	---	Part name	M10x1.5x124-6g			
Mechanical	ISO 898-1	DWG.NO	DN289-92614A/01/00			
Coating	KES C-F002	---	Name	Data	Scale	1.2:1
Tolerances	ISO 4759-1	Drawn	M.Zolfaghari	01/11/27	Safety	☐
		Cheked	S.Zabihi	01/11/27	Regularity	☐
Other Standard	---	Confirmed	K.Farahmand	01/11/27	Unit : mm	

سپند پیچ یزد

SEPAND PITCH CO.

Machine	135L	Core Hardness	22 - 32
Material	10B21	Surface Hardness	---
Dia.of Material	11-12	T.S (Mpa)	Min 800
diameter blank	9.60	Y.S (Mpa)	Min 640
length blank	124	Proof Load (N)	46400
Weight	90 gr	EL (%)	12
Rod Production process	PASAIP/ SAIP2	Type Coating	MFZnT1-C
		Color	Gold
Quality Class	8.8	Salt Spray To Sediment Red	Min 120 h
Coating	Chromate	Salt Spray To Sediment Withe	Min 72 h
Customer Name :		**Saze gostar**	