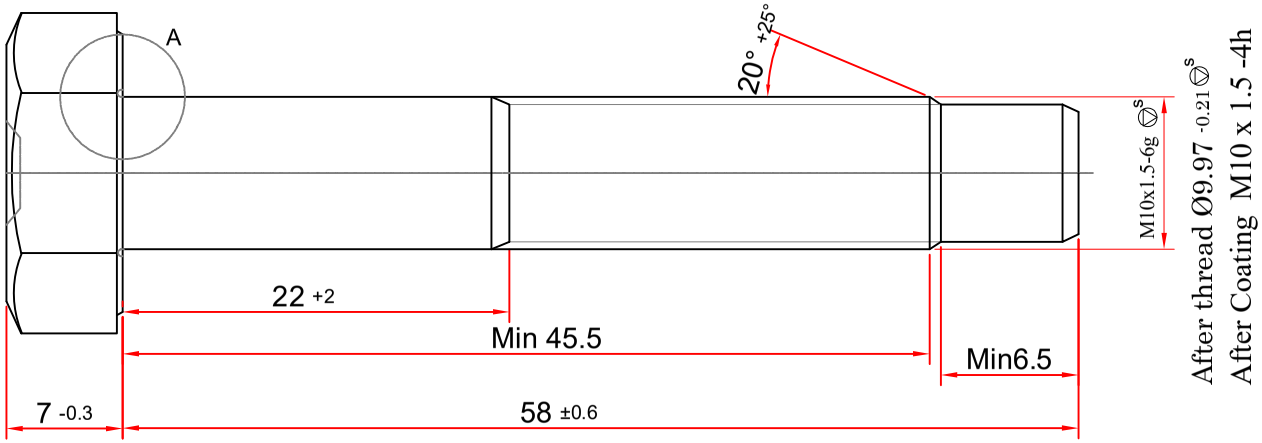

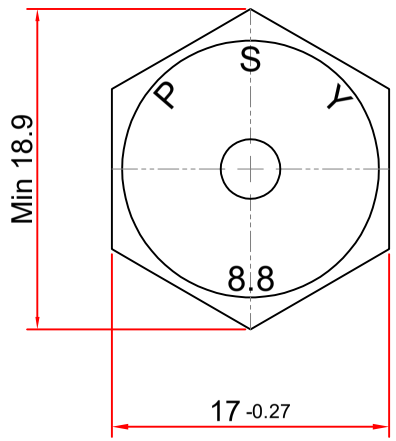

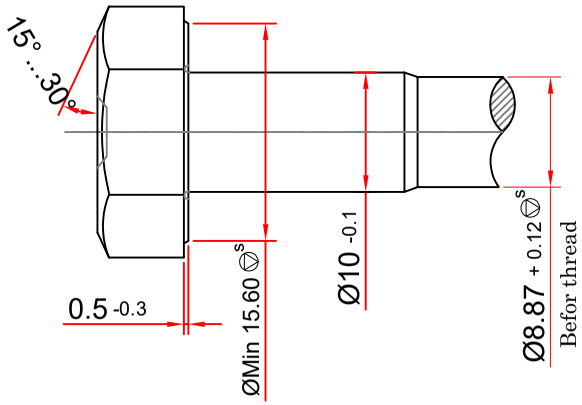

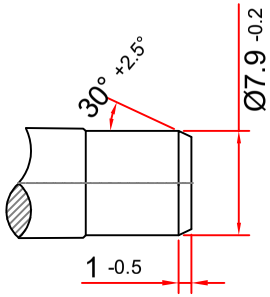

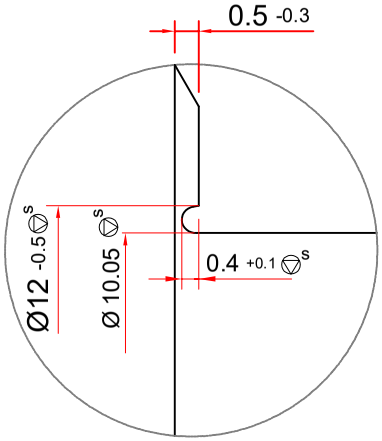

Detail A

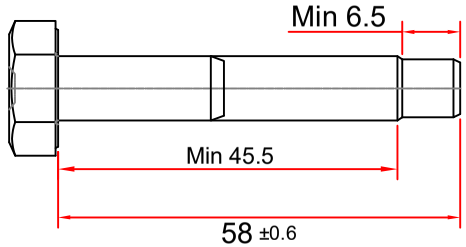

For press

FN: 0.12-0.18

Surface area:2987.95mm^2

Coating thickness :Min 9µm

Coating mass :Min 36 gr/m^2

Purity of steel : Check the purity of steel in accordance with the standard NFA.04-106

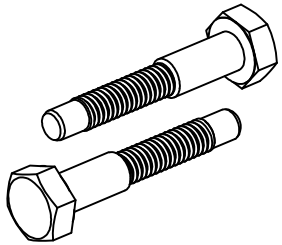

Scale 1:1

RE.VE:1	DATE	03/10/02	NAME	M.Abadiyan	Description	تغییرنشـــــــــینگاه پیـــچ از ۱۵.۶۰به ۱۴.۶۳
RE.VE:2	DATE	04/01/26	NAME	M.Abadiyan	Description	اصلاح شماره فنی وپارامترهای ابعادی وافزودن مساحت سطح به نقشه وافزودن علامت ایمنی
RE.VE:3	DATE	---	NAME	---	Description	---

Feasibility Number :	03-059	Assembly Location	پیـــچ شش گـوش راهنما دار				
Reference Standard Are As Below :		Part NO	9683681880				
Dimension	PSA C10 0020	Part name	M10x1.5x58				
Mechanical	ISO 898-1	DWG.NO	DN9683681880/02				
Coating	PSA B15 3320		Name	Data	Scale	1.5:1	
		Drawn	M.Abadiyan	03/07/19	Safety	☑	
Tolerances	---	Checked	S.Zabihi	03/07/19	Regularity	☐	سپند پیچ یزد
Other Standard	PSA R 991101	Confirmed	Mh.Abaei	03/07/19	Unit : mm		SEPAND PITCH CO.

Material	10B21 10B38	Quality Class	8.8
Dia of Wire	12 mm	Core Hardness(HRC)	24-32
Weight (gr) ≈	43	Surface Hardness(HV)	---
Wire Production process	SAIP2	Tensile Strength (Mpa)	Min 800
Coating	Zinc Flake Geomet 500B	Yield Strength (Mpa)	Min 640
Coating Type	ZLVFGL	Proof Load(N)	---
Chromate Color	Silver gray	EL (%)	Min 12
Resistance to Salt Spray		White Rust	---
		Red Rust	Min 1000 h
Customer Name	طوبـی آرایـش		