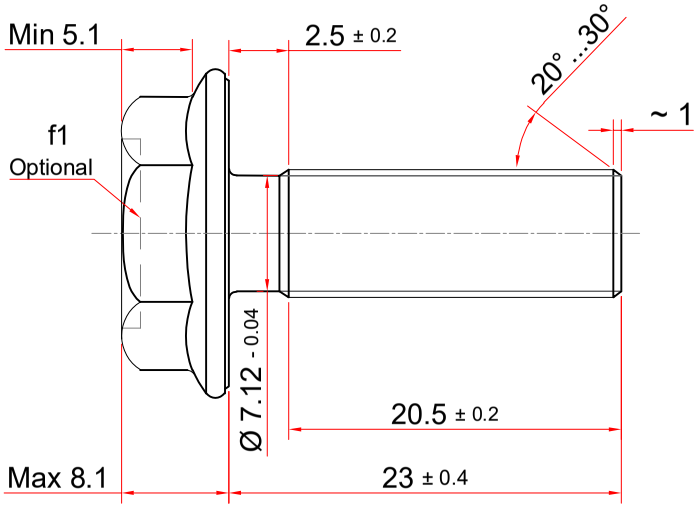

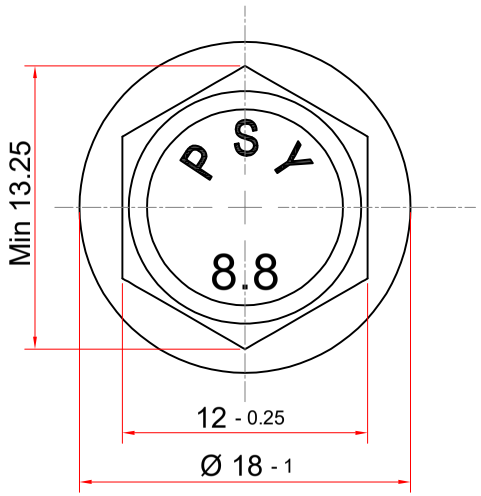

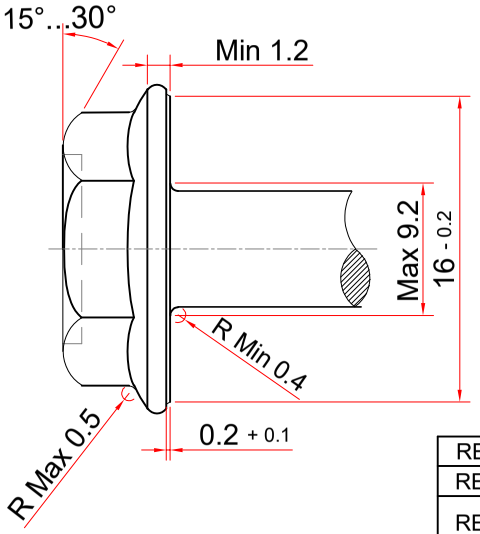

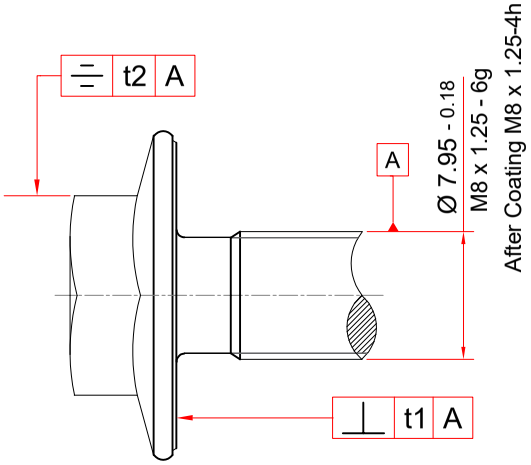

1- t2 :Max 0.44
2- t1 :Max 0.1
3- Coating thickness :Min 8µm
4- Depth of decarburization :Max 0.3mm
5- Depth of complete decarburization :Max 0.015mm
6- f1 : 1.3 K or less (K :thickness of the head screw)
7- Absence of defects harmful to screw performance ,such as cracks ,burrs ,surface roughness ,rust in threads.
8- Cracks ,peeling ,blisters and other surface defects should not be observed in the coating.

RE.VE:1	DATE	02/12/12	NAME	S.Zabihi	Description	اصلاح شماره فنی
RE.VE:2	DATE	03/02/01	NAME	S.Zabihi	Description	اصلاح اندازه اچارخور
RE.VE:3	DATE	03/05/15	NAME	M.Abadiyan	Description	اصلاح فاصله زیر کله تاشروع اولین گام رزوه

Standard List		Part NO	DN28062818A			
Dimension	07-02-041	Part name	M8 x 1.25 x 23_6g			
Mechanical	Renault 39-02-201	DWG.NO	DNDN28062818A/03			
Coating	KES C-F002A	---	Name	Data	Scale	2:1
Tolerances	ISO 4759-1	Drawn	M.Zolfaghari	02/02/17	Safety	☐
		Cheked	S.Zabihi	02/02/17	Regularity	☐
Other Standard	ISO 898-1/ 01-30-010	Confirmed	K.Farahmand	02/02/17	Unit : mm	

سپند پیچ یزد

SEPAND PITCH CO.

Machine	84S	Core Hardness(HRC)	24 - 32 (250-320 HV)
Material	10B21-10B38	Surface Hardness(HV)	420 HV
Dia.of Material	10	T.S (Mpa)	Min 800
diameter blank	7.6	Y.S (Mpa)	Min 640
length blank	---	Proof Load (Mpa)	---
Weight	---	EL (%)	Min 12%
Rod Production process	PASAIP	Type Coating	MFZn T1W / MFZnT2C
		Color	White / Yellow
Quality Class	8.8	Salt Spray To Sediment Red	Min 144h
Coating	Chromate	Salt Spray To Sediment White	---
Customer Name :		**Saze Gostar**	