N1	مـارک و گریـد در موقعیـت N1 حک شود (عمـق و قطـر آپشـنال اسـت): PSY & 8.8
Note	Diameter before of thread Ø7.12 - 0.05

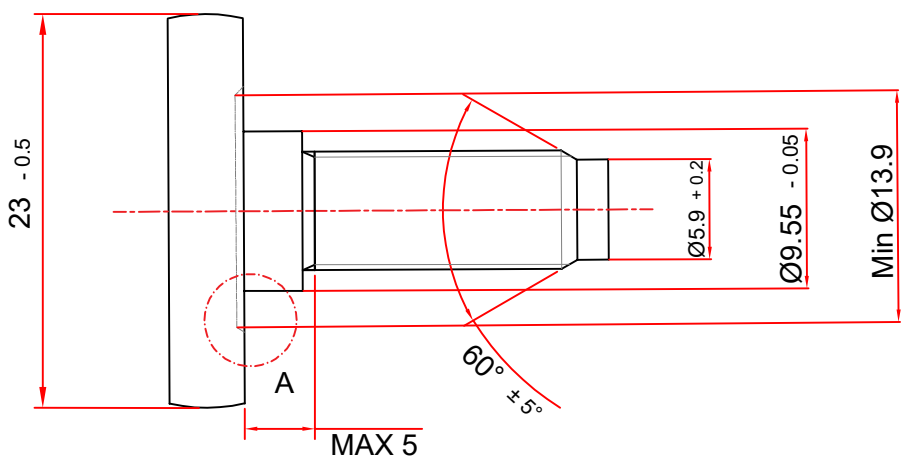

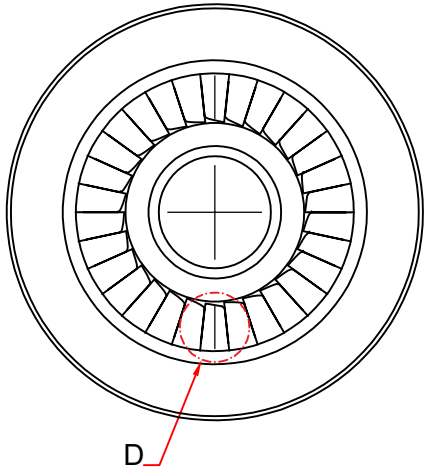

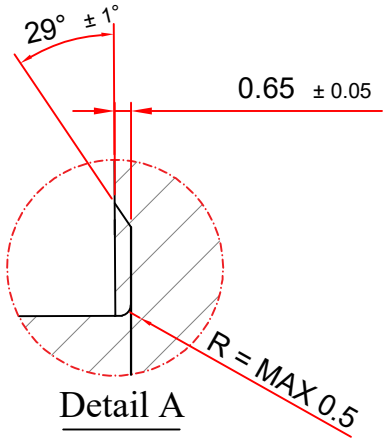

Detail A

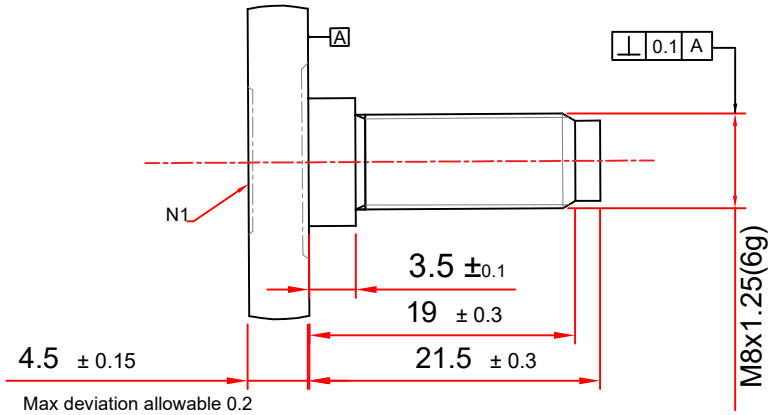

Max deviation allowable 0.2

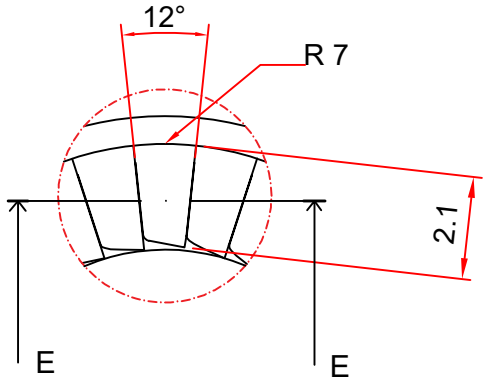

Detail D

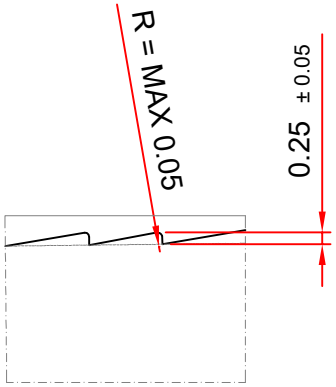

Section E-E

RE.VE:	DATA	---	NAME	---	Description	---

Standard List		Part NO	DZ3335010			
Dimension	According to Drawing: DZ3335010	Part name	M8x1.25x21.5-6g			
Mechanical	---	DWG.NO	DNDZ3335010/00			
Coating	---	---	Name	Data	Scale	2/1
Tolerances	---	Drawn	B.Salehizade	00/10/01	Safety	☑
		Cheked	M.Irandost	00/10/01	Regularity	☐
Other Standard	---	Confirmed	K.Farahmand	00/10/01	Unit : mm	

سپند پیچ یزد

SEPAND PITCH CO.

Machine	CBP105S	Core Hardness(HRC)	24-32
Material	10B21	Surface Hardness	---
Dia.of Material	10 mm	T.S (Mpa)	Min 800
diameter blank	9.10 mm	Y.S (Mpa)	Min 640
length blank	40.79 mm	Proof Load	---
Weight	20 gr	EL (%)	Min12%
Rod Production process	PASAIP	Type Coating	---
		Color	Golden
Quality Class	8.8	Salt Spray To Sediment Red	Min 120h
Coating	Coromate	Salt Spray To Sediment Withe	Min 72h
Customer Name :		ایداج	