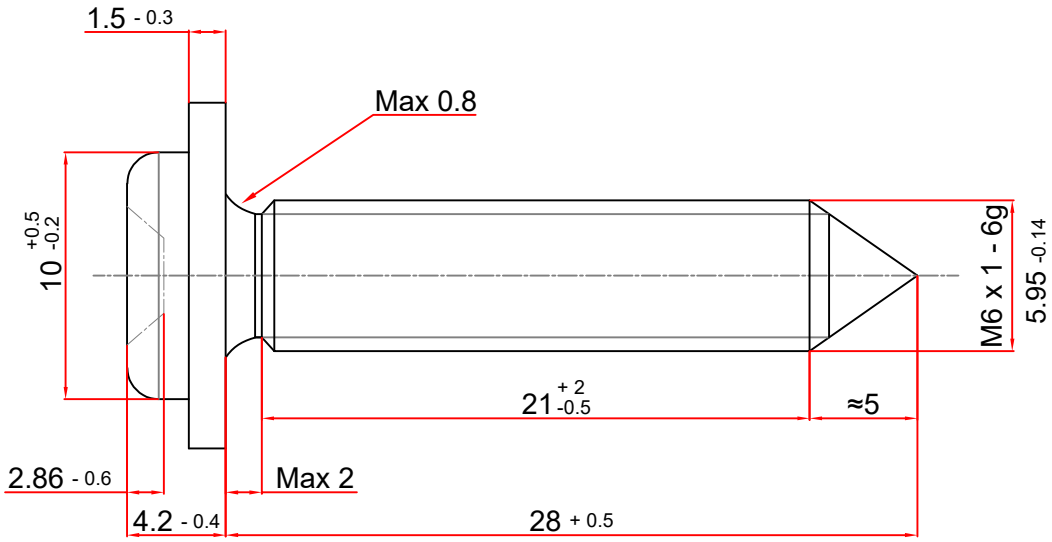

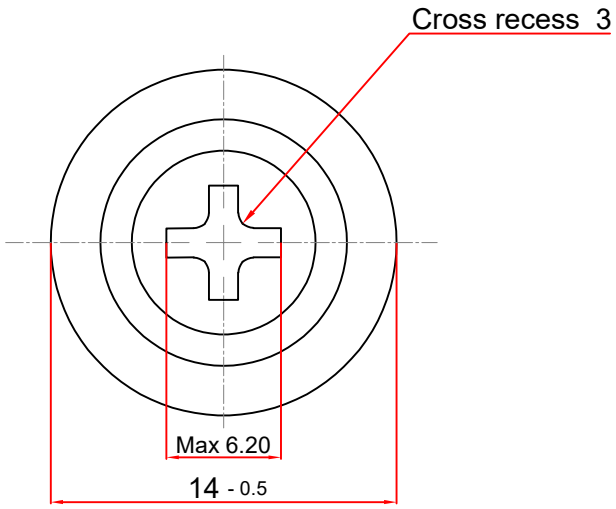

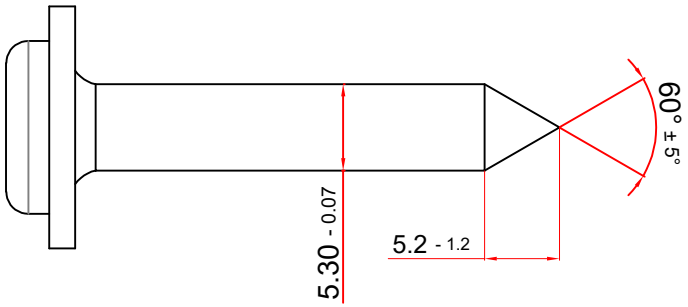

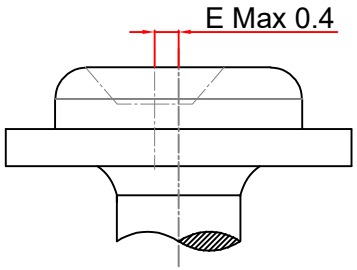

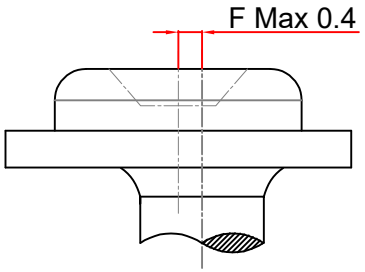

Coating thickness :Min 5μm
Depth of decarburization :Max 0.3mm
Depth of complete decarburization :Max 0.015mm

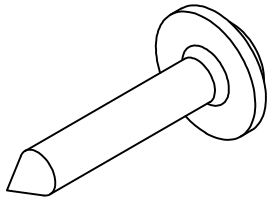

Scale : 1: 1

RE.VE:	DATE	1402/06/11	NAME	S.Zabihi	Description	افزودن اندازه فاصله زیر کله و مشخص شدن تلرانس طول نافی و رزوه و تغییر تلرانس دور کله

Standard List		Part NO	SK2AT69475A
Dimension	KES E-A016	Part name	M6x1x28-6g
Mechanical	KES C-C001	DWG.NO	DNSK2AT69475A/01
Coating	KES C-F002	---	Name / Data / Scale / 3:1
Tolerances	---	Drawn	M.Zolfaghari 1402/01/29 Safety ☐
		Cheked	S.Zabihi 1402/01/29 Regularity ☐
Other Standard	---	Confirmed	K.Farahmand 1402/01/29 Unit : mm

سپند پیچ یزد

SEPAND PITCH CO.

Machine	---	Core Hardness(HRC)	21 - 32
Material	10B21/10B38	Surface Hardness(HV)	Max 320
Dia.of Material	---	T.S (Mpa)	785-981
diameter blank	---	Y.S (Mpa)	Min 628
length blank	---	Proof Load(Mpa)	571
Weight	7.1 gr	EL (%)	Min 12%
Rod Production process	SAIP2	Type Coating	MFZn T1C
		Color	Golden
Quality Class	8.8	Salt Spray To Sediment Red	Min 120h
Coating	Chormate	Salt Spray To Sediment White	Min72 h
Customer Name :		**Saze Gostar**	