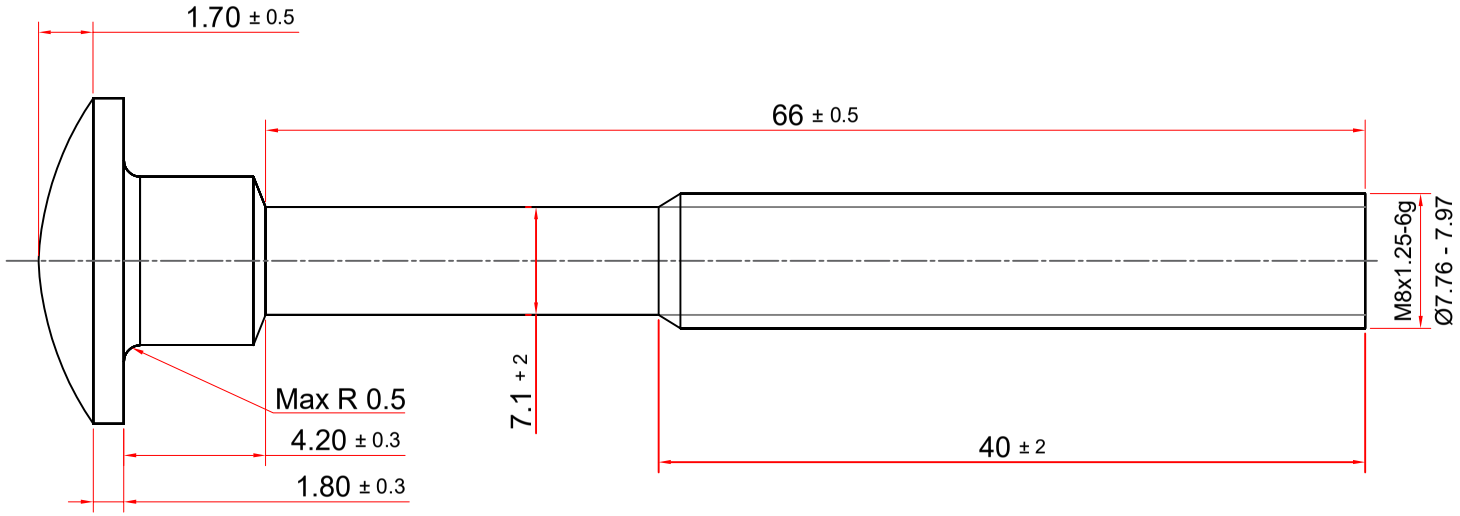

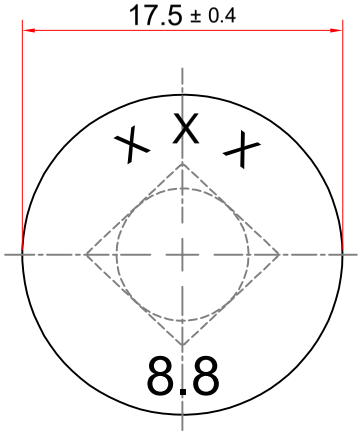

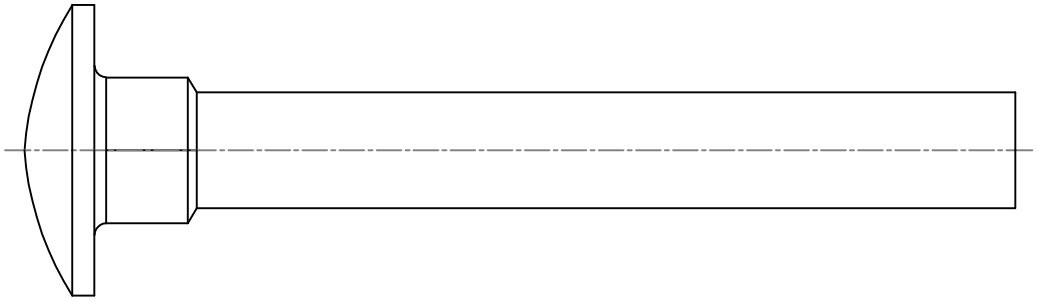

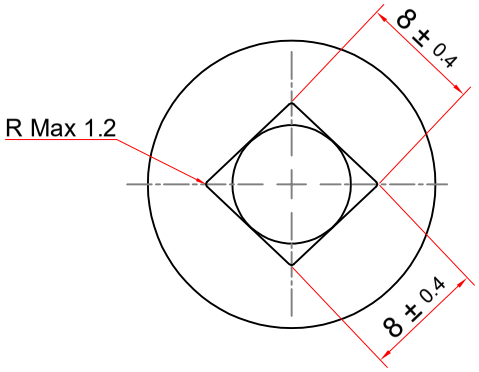

X : مطابق کـارت همـراه

RE.VE:	DATA	---	NAME	---	Description	---

Standard List		Part NO	---			
Dimension	DIN 603	Part name	M8*1.25*70-8.8-6g			
Mechanical	DIN 898-1	DWG.NO	TP603/08/00			
Coating	---	---	Name	Data	Scale	2:1
Tolerances	ISO 4759-1	Drawn	M.Zolfaghari	01/07/16	Safety	☐
		Cheked	S.Zabihi	01/07/16	Regularity	☐
Other Standard	---	Confirmed	K.Farahmand	01/07/16	Unit : mm	

سپند پیچ یزد

SEPAND PITCH CO.

Machine	---	Core Hardness(HRC)	22-32
Material	10B21 10B38	Surface Hardness	---
Dia.of Material	---	T.S (Mpa)	Min 800
diameter blank	---	Y.S (Mpa)	Min 640
length blank	---	Proof Load	---
Weight	---	EL (%)	Min 12%
Rod Production process	SAIP2	Type Coating	---
		Color	---
Quality Class	8.8	Salt Spray To Sediment Red	---
Coating	--	Salt Spray To Sediment Withe	---
Customer Name :		---	