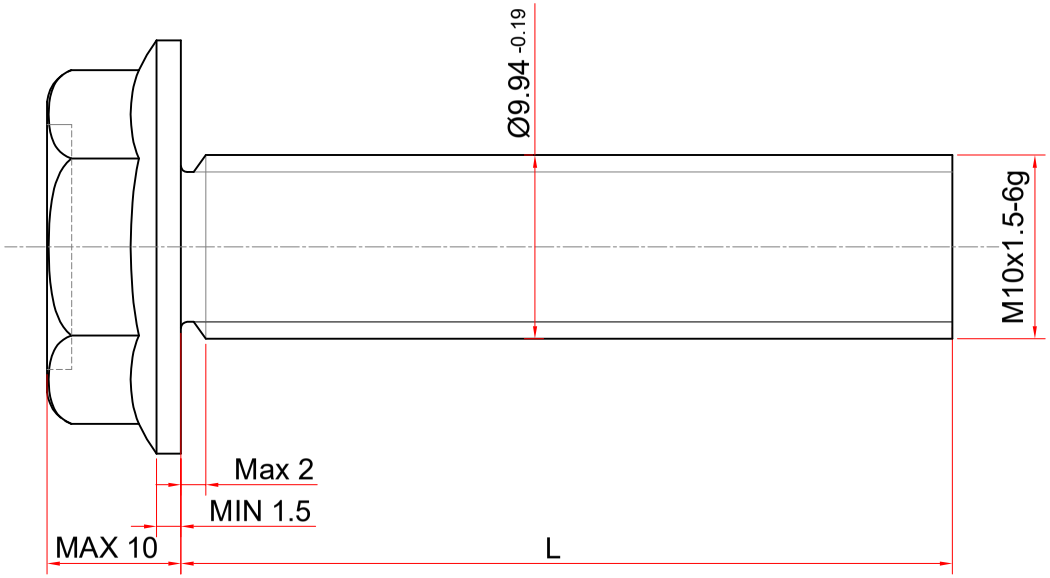

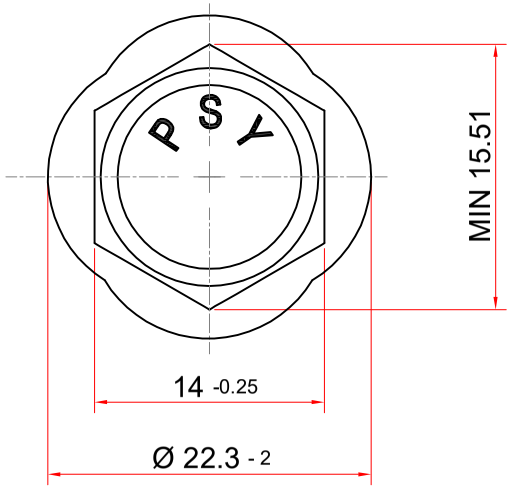

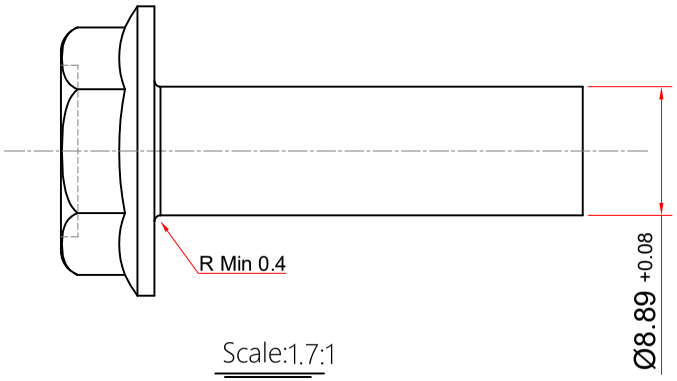

Scale:1.7:1

L	Tolerance
20	19.58-20.42
25	24.58-25.42
30	29.5-30.5
40	39.5-40.5
50	49.5-50.5
60	59.5-60.5
70	69.5-70.5
80	79.5-80.5

RE.VE:	DATA	---	NAME	---	Description	---

Standard List		Part NO	---			
Dimension	DIN 6921	Part name	M10 x 1.5 x L			
Mechanical	---	DWG.NO	TP6921I(FT)/10/00			
Coating	---	---	Name	Data	Scale	2.5:1
Tolerances	---	Drawn	S.Zabihi	1400/11/21	Safety	☐
		Cheked	M.Irandost	1400/11/21	Regularity	☐
Other Standard	---	Confirmed	K.Farahmand	1400/11/21	Unit : mm	

سپند پیچ یزد

SEPAND PITCH CO.

Machine	---	Core Hardness(HRB)	---
Material	---	Surface Hardness	---
Dia.of Material	---	T.S (Mpa)	---
diameter blank	---	Y.S (Mpa)	---
length blank	---	Proof Load(Mpa)	---
Weight	---	EL (%)	---
Rod Production process	SAIP2	Type Coating	---
		Color	---
Quality Class	---	Salt Spray To Sediment Red	---
Coating	---	Salt Spray To Sediment Withe	---
Customer Name :		---	