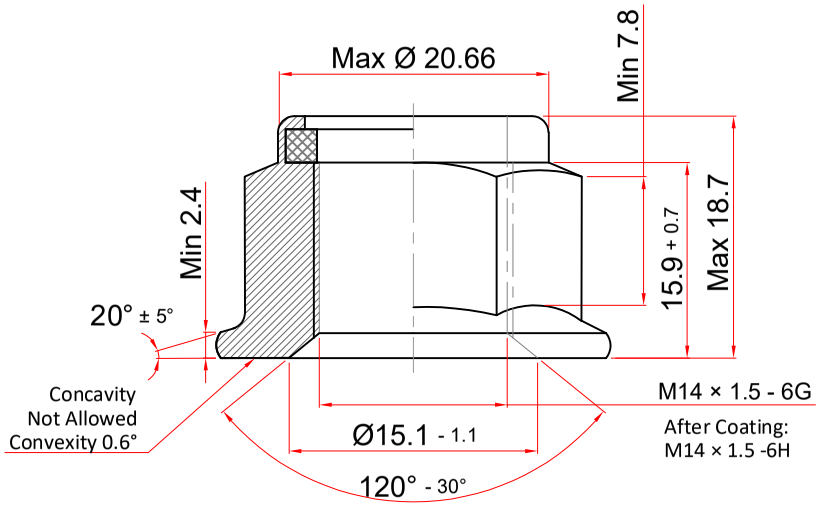

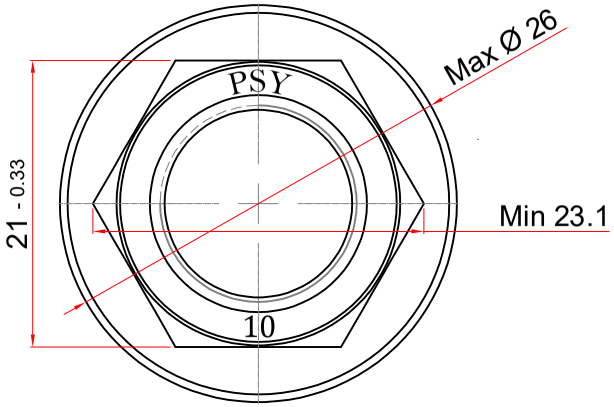

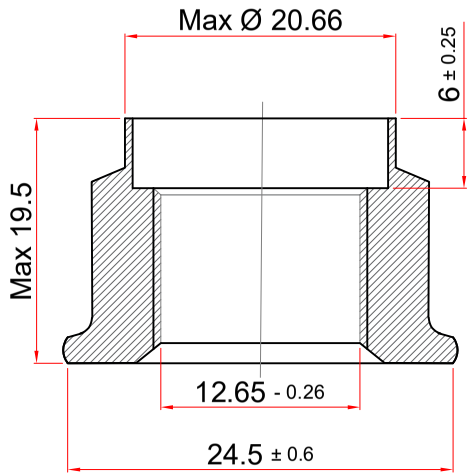

For Press

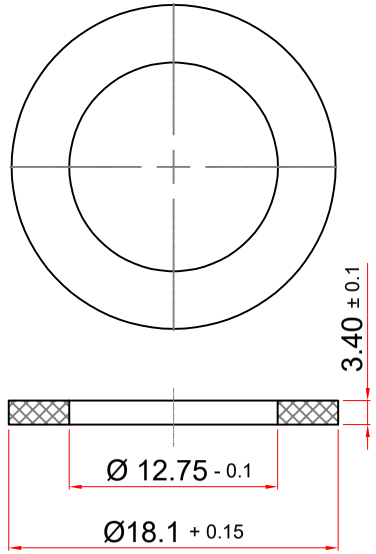

Hardness :Min 60 HR

Material :NYLON 6.6

1- Prevailing torque for the first fixing: Max 8
2- Prevailing torque for the first removal: Min 4.5
3- Prevailing torque for the third removal: Min 2.7
4- Coating thikness: Min 6 µm
5- Coating mass: Min 24 gr/m^2
6- Surface Area: 3352.93 mm^2

RE.VE:1	DATE	---	NAME	---	Description	---
RE.VE:2	DATE	---	NAME	---	Description	---
RE.VE:3	DATE	---	NAME	---	Description	---
Feasibility Number :		---	Assembly Location		مهره کمک فنرماشین ریرا	
Reference Standard Are As Below :			Part NO		9684033880	
Dimension		---	Part name		M14 x 1.5 -6H	
Mechanical		PSA C20 0060	DWG.NO		DN9684033880/00	
Coating		PSA B15 4102		Name	Data	Scale 1.5:1
			Drawn	H.Abotalebi	04/07/01	Safety
Tolerances		DIN 7168	Checked	A.Baniasadi	04/07/01	Regularity
Other Standard		---	Confirmed	A.Baniasadi	04/07/01	Unit : mm

سپند پیچ یزد
SEPAND PITCH CO.

Material	10B21 10B38	Quality Class	10
Dia of Wire	22-23-24mm	Core Hardness(HRC)	20-36 241 - 360 HV
Weight (gr) ≈	31.34	Surface Hardness (HV 0.3)	----
Wire Production process	PASAIP PSASAIP	Tensile Strength (Mpa)	----
Coating	Zinc Flake	Yield Strength (Mpa)	----
Coating Type	ZLVMGL	Proof Load(N)	125000
Chromate Color	Silver Garay	EL (%)	----
Resistance to Slat Spray		White Rust	----
		Red Rust	Min 600 hr
Customer Name		Sapco	