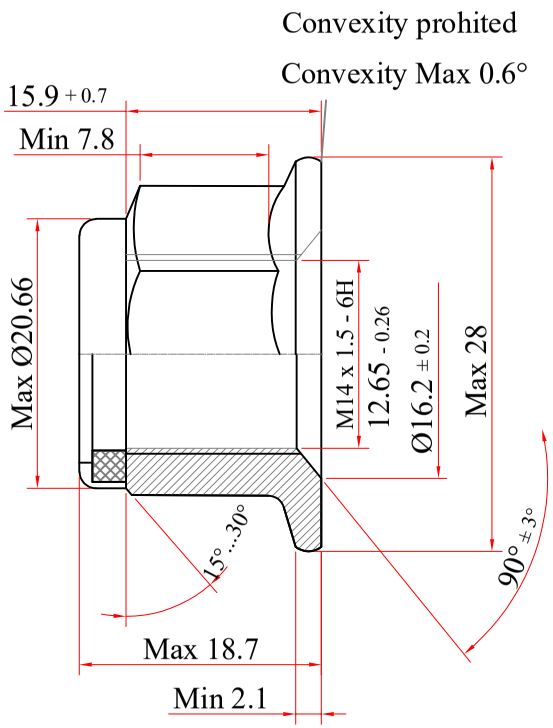

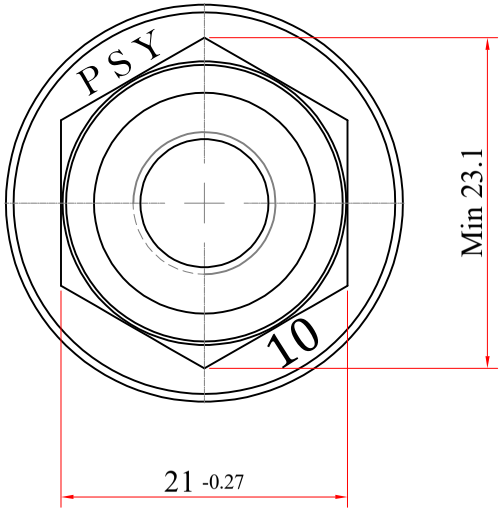

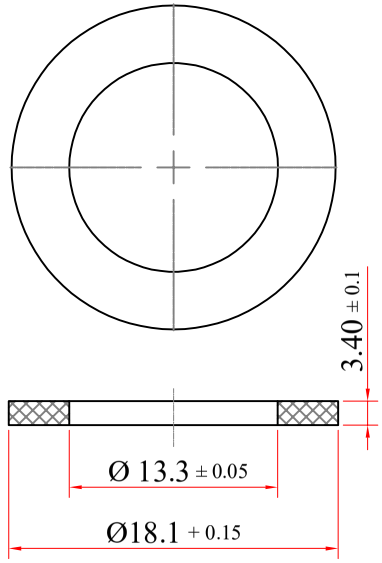

Hardness: Min 60 HR

Material: NYLON 6.6

1- Prevailing troque for the first fixing :Max 31
2- Prevailing troque for the first removal :Min 4.4
3- Prevailing troque for the Fifth removal :Min 3
4- Coating thikness: Min 6 µm
5- Surface Area: 2924.97 mm^2

RE.VE:1	DATE	1403.04.18	NAME	M.Abadiyan	Description	اضافه کردن نقشه واشر
RE.VE:2	DATE	1403.05.01	NAME	M.Abadiyan	Description	اصلاح گشتاور بستن پیچ و زمان سالت اسپری
RE.VE:3	DATE	1404.09.10	NAME	H.Abotalebi	Description	اصلاح سختی و افزودن مساحت سطح مقطع و شماره امکان‌سنجی و اصلاح شیت نقشه

Feasibility Number :	03-029	Assembly Location	مهره کمک فنر ماشین آریا
Reference Standard Are As Below :		Part NO	TC28556121
Dimension	---	Part name	M14×1.5_6H
Mechanical	---	DWG.NO	DNTC28556121/03
Coating	---		
Tolerances	Din 7168		
Other Standard	---		

	Name	Data	Scale	1.5:1
Drawn	M.Abadiyan	1403.03.13	Safety	☑
Checked	S.Zabihi	1403.03.13	Regularity	☐
Confirmed	Mh.Abaei	1403.03.13	Unit : mm	

سپند پیچ یزد
SEPAND PITCH CO.

Material	10B21 10B38 S	Quality Class	10 S
Dia of Wire	22-23-24 mm	Core Hardness (HRC)	33-39 S
Weight (gr) ≈	38 gr	Surface Hardness (HV 0.3)	---
Wire Production process	PASAIP PSASAIP	Tensile Strength (Mpa)	---
Coating	Zinc Flake	Yield Strength (Mpa)	---
Coating Type	DMF2 S	Proof Load(Mpa)	Min 980 S
Chromate Color	Silver Gray	EL (%)	---
Resistance to Slat Spray		White Rust	---
		Red Rust	Min 480 hr S
Customer Name	Saze Gostar		